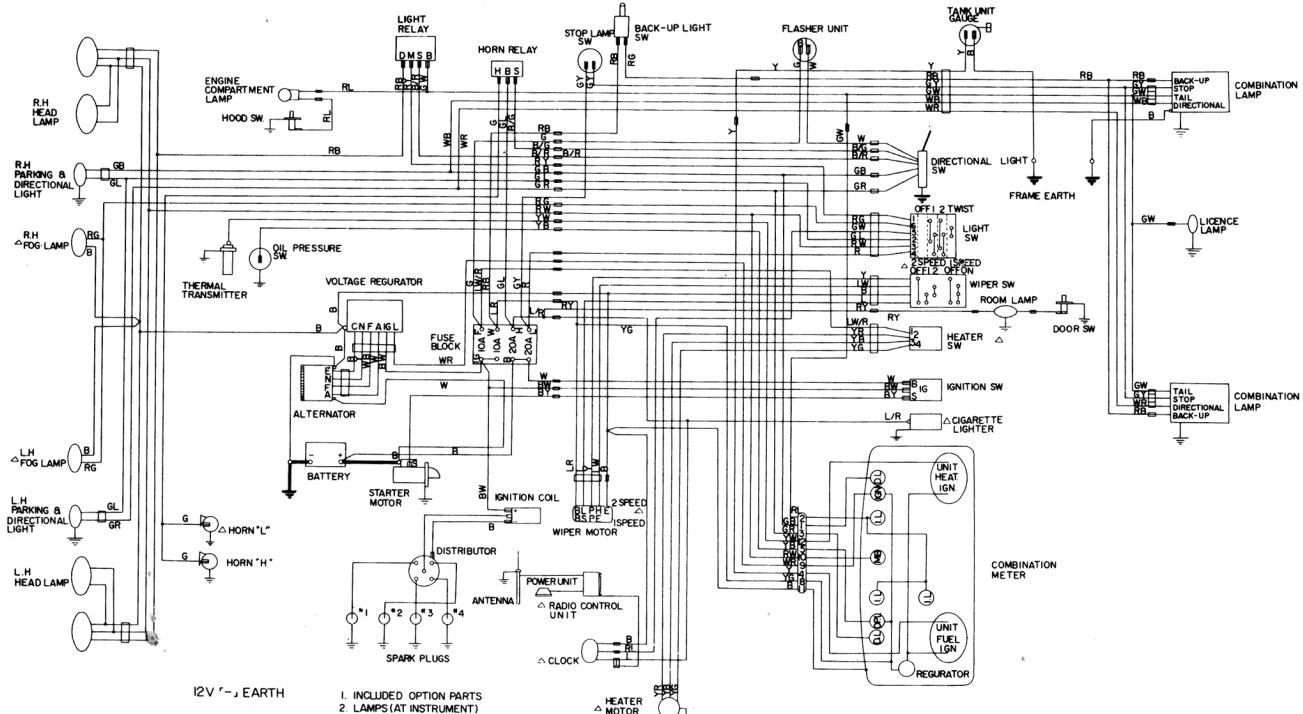

1. INCLUDED OPTION PARTS
2. LAMPS (AT INSTRUMENT)
   IL : INSTRUMENT LAMP
   DL : DIRECTIONAL LIGHT PILOT LAMP
   MB : MAIN BEAM PILOT LAMP
   IG : IGNITION WARNING LAMP
   OIL : OIL PRESSURE WARNING LAMP
3. THE SIZE OF ELECTRIC LINE IS 0.5mm EXCEPT MARKED THE SIZE.
4. THE PARTS MARKED △ MEANS OPTIONAL EQUIPMENT.